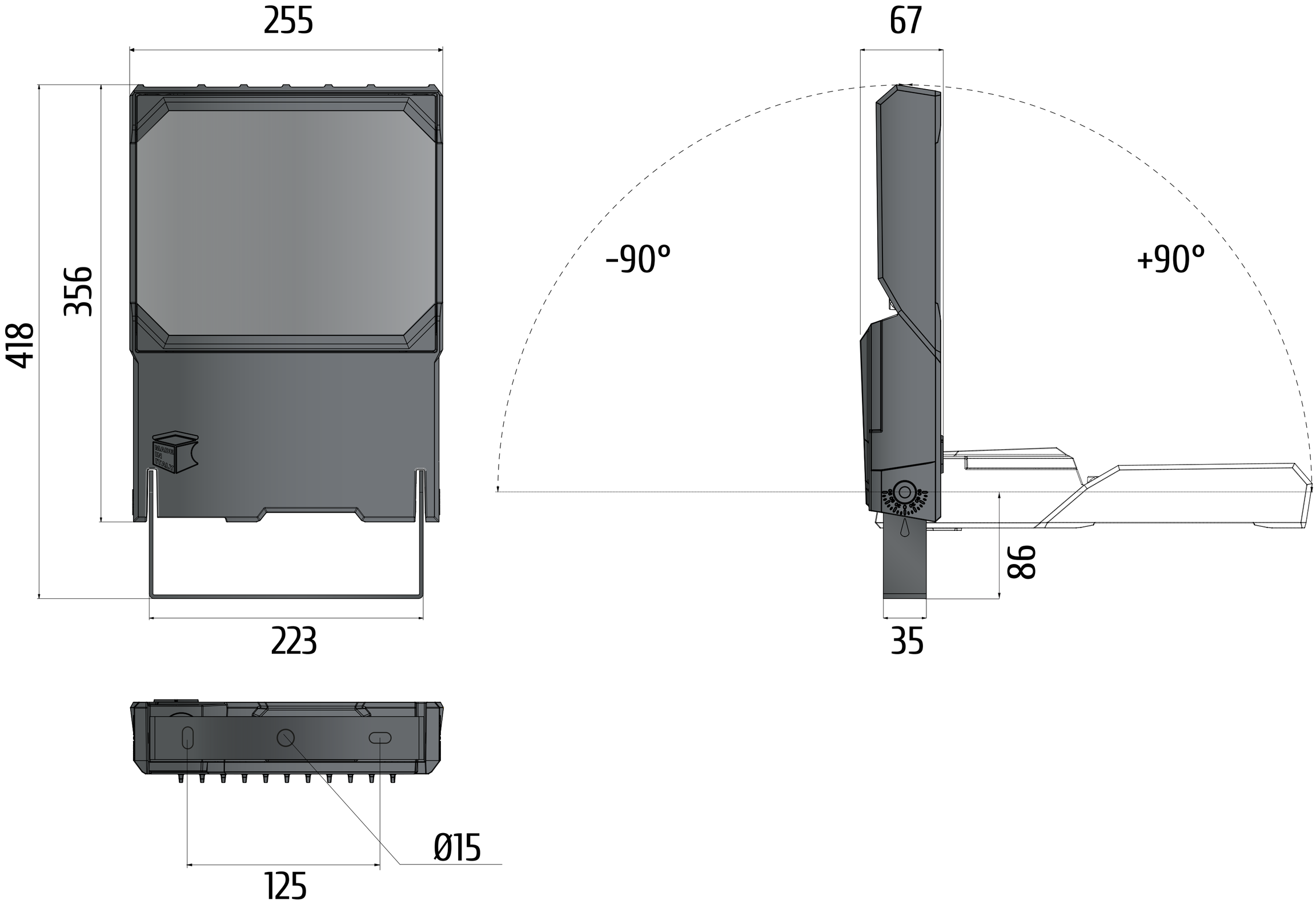
255
67
-90°
+90°
418
356
MADE IN ITALY
86
223
35
Ø15
125